ENERGY STAR Connected Thermostats

Communicating Controls for Variable Capacity HVAC Workshop, Part 1

April 3, 2020

Webinar Audio Access

- USE YOUR TELEPHONE:

  Call-in Number: (877) 423-6338

  Passcode: 436598#

Webinar Participation

- Please mute yourself when you are not speaking (use local mute or dial *6)
- Feel free to ask questions at any time by typing in the Question box or wait for the Q&A session

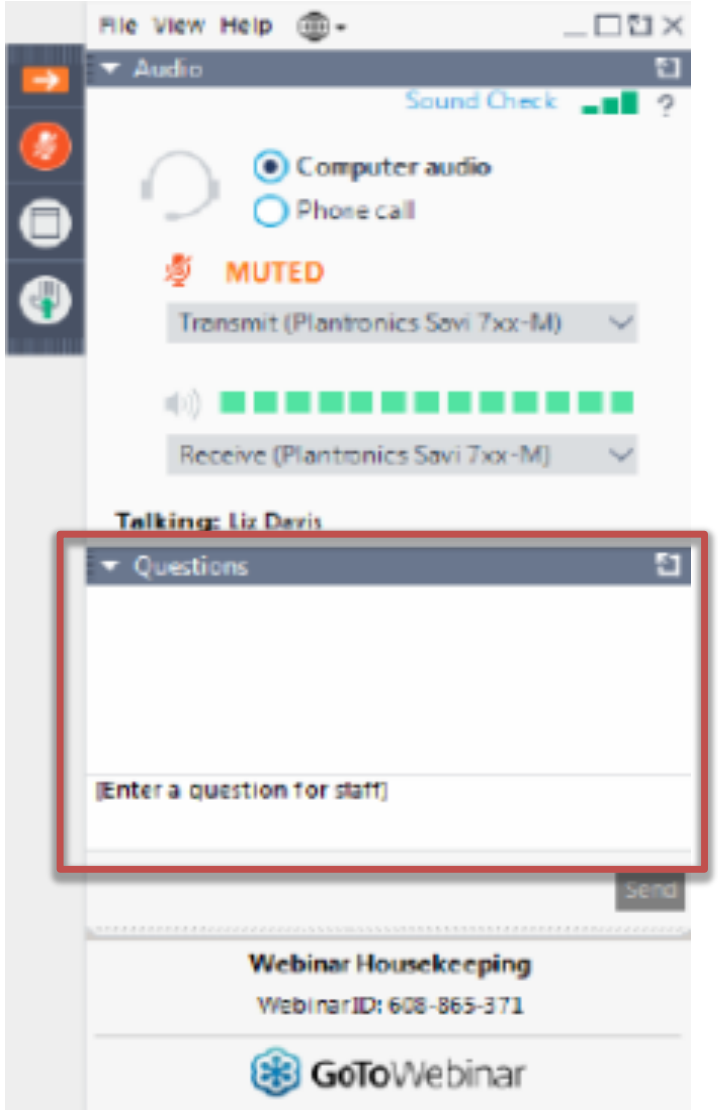

Agenda

- Context and background:
  - Abi Daken, EPA: The Existing Connected Thermostat Specification and What Do We Need in a Metric?
  - Dave Winningham, Lennox: Variable Capacity HVAC Technology
- Discussion
  - Scope
  - Context setting questions: typical communicating controller installations, and what data are available on the installations?
  - Savings Mechanisms: what are they, and which shall we focus on?
- Wrap up, Next Steps: Looking Ahead to Monday 4/6 Workshop

The Current Connected Thermostat Specification, since 2016

- **Connected Thermostat definition**: the CT product includes the CT device in the home with associated firmware, as well as a CT service supported by hardware and software outside of the home.
  - Note that communicating controllers for variable capacity HVAC are in scope
- Certification relies on three types of criteria
  - Device criteria, applying to the physical hardware, including standby power and temperature accuracy
  - Product criteria (device and service), including scheduling, energy feedback, etc.
  - Submission of analyzed and aggregated field data showing set back/set up
- Enthusiastic response to the specification
  - More than 38 million US households (32%) can get rebates for purchase and/or installation of an ENERGY STAR thermostat, through 197 programs
  - In 2018, 58% of smart thermostats sold were ENERGY STAR certified
  - All major third party brands have most of their models certified

Clarification of Terms: Connected vs. Communicating

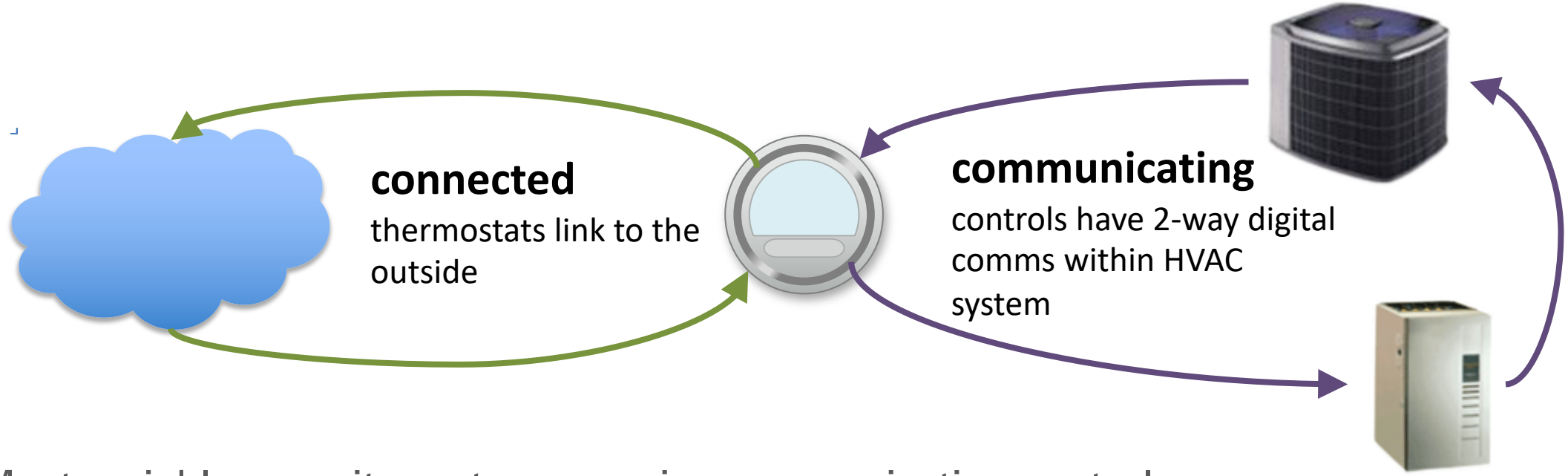

- Most variable capacity systems require communicating controls
- Communicating controls can also be used to control any HVAC, and have some advantages for such
- Ductless mini-splits often have a remote which is only a user interface; all other control functions are in the HVAC, so “communication” is not applicable.

Field Data Analysis

- Savings metric is % run time reduction compared to run time for constant comfort temperature for that particular home
- Several assumptions in the EPA method:
  - ~~Run time as a proxy for energy use~~
  - ~~Set back and set up primary opportunities for savings; more use = more savings~~
  - ~~In core heating (cooling) season, roughly linear relationship between indoor-outdoor temp difference and heating (cooling) equipment run time/energy use~~
- Limited installations analyzed to those wired as single capacity systems
- From beginning, have advised using proprietary, non-ENERGY STAR certified controls for variable capacity HVAC, but never really sufficient
- As of 2019, certified thermostat required for ENERGY STAR SHEMS, exacerbating problem

Including proprietary controllers for variable capacity systems

- Understand what is typically keeping them from certifying
- If we set different specs, need definition of these controllers – will discuss later, along with possibility of a "system" spec instead
- Differentiate controls that are savings consumers with variable capacity HVAC energy
  - For this, we need one or more metrics
  - Also need to understand where to apply those metrics
  - And need to establish a baseline to compare accomplishment to

What we need in a metric

- "Good enough" means
  - Representative of HVAC energy use
  - Demonstrates acceptable performance; able to ID a level considered "good"
  - Applicable to the majority of installations using the product
  - Fairly compares one vendor to another
- Would be nice but do <u>not</u> need
  - Absolute measurement of energy savings
  - Can distinguish excellent performance
- What do we have to start with?
  - Data that can be known about the operation of the system, to sufficient precision to differentiate
  - Need not necessarily be stored in the cloud

The Critical Role of Baselines

- Choosing the right baseline for comparison is critically important to both the fairness and the usefulness of the metric
- Consider baseline in current specification: per home comfort temperature
  - Using a temperature baseline means we only capture savings from temperature settings, not from opening windows, for example
  - Using a constant comfort temperature baseline is known to be unrealistic, but fair between vendors; utilities may correct to use locally
  - Adopted per-home baseline in case of different user groups between vendors: supports fairness, but means that savings from more energy-conserving comfort temp is not rewarded
- In this case, to reward controls only, need to use variable capacity performance with poor controls as baseline; may not be able to use total energy use as metric
- For systems, could use performance of fixed or dual capacity system as baseline, and total energy use as a metric

Complicated discussion – keeping on track

- This will be a complicated discussion, because we are trying to solve a hard problem. Some principles that we've found useful in the technical discussions of the current specification, to avoid rabbit holes:
  - Do not let the perfect be the enemy of the good: we are looking for a solution that is good enough, not a perfect solution. To that end…
  - Does this introduce a bias between vendors?
  - What are the FIRST ORDER effects? If we are considering the need to capture an effect, first ask how substantial the energy savings/cost is compared to other effects.
- We will maintain a parking lot, and there will be an opportunity to comment broadly.

EPA ENERGY STAR
Communicating Controller Workshop

April 3, 2020

HVAC System Technology

Single Stage	Enhanced Single Stage	Multi-Capacity	Variable Capacity
• Base Efficiency • No System Communication	• Improved Efficiency • Limited System Communication • Limited Commissioning and Diagnostics	• Good Efficiency • Improved Comfort • Expanded System Communication • Improved Commissioning and Diagnostics	• Best Efficiency • Best Comfort • Full System Communication • Full Commissioning and Diagnostics

EPA ENERGY STAR Thermostat Specification

Efficiency

Communication Capability - Commissioning, Diagnostics

Demand Side Management Capability

LENNOX INTERNATIONAL

Energy Benefits - Variable Speed Communicating Systems

- Field data from Lennox variable speed communicating systems indicate they operate greater than 60% of the time at less than 50% capacity and only approximately 10% of the time near full capacity.
- Analysis demonstrates that Lennox Variable Speed Systems save ~20-35% energy versus Single Speed Systems with Energy Star Thermostats at same conditions
- Lennox communicating system offer additional diagnostic and prognostic features which allow for timely problem identification and resolution, in turn, saving energy

[redacted]

Comparison of System Run Times at Different Loads

FIELD DATA FROM LENNOX COMMUNICATING SYSTEMS

System Type	SEER Level	Avg. Tons	No. of Systems	Avg. Runtime (min.)	% of Total Runtime in each LOAD Bin						
					<=40%	>40, <=50%	>50, <=60%	>60, <=70%	>70, <=80%	>80, <=90%	>90, <=100
Single Speed	17	2.9	107	38852							100
	18	3.0	1065	35199							100
Two Speed	21	3.6	1105	52104				73			27
Variable Speed	20	3.8	1569	99858	36	33	8	6	4	3	10
	25	3.8	2360	112456	58	12	7	6	4	3	10

1 – Single speed systems operate at 100% demand when ON
2 – Two Speed Systems operate at 70% or 100% demand when ON

- **Variable Speed Systems Run Longer BUT at much Lower Capacities**
- **System Efficiency Increases as Capacity is Decreased**

[redacted]

LENNOX INTERNATIONAL

Energy Simulation in Homes in Different Regions

Process

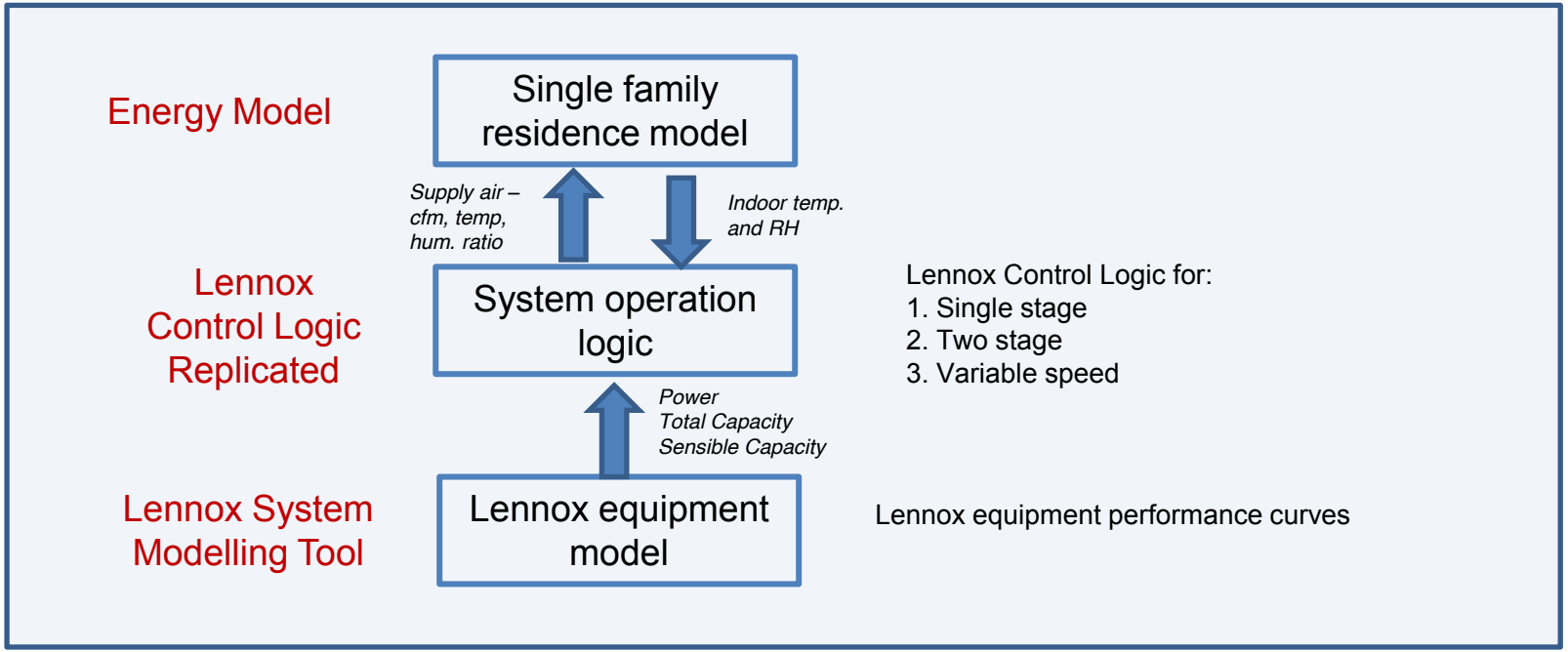

- Simulation at 1 minute time step, with data exchange between modules at every time-step
- TMY3 weather data

[redacted]

Energy Savings Comparison

SIMULATION RESULTS

Cooling Energy: Constant cooling setpoint at 75 F

	Dallas		Phoenix		Chicago		Miami	
	kWh	Savings	kWh	Savings	kWh	Savings	kWh	Savings
Single stage XC21[1]	3091		4649		1308		4474	
Two stage XC21	2749	11 %	4385	6 %	1140	13 %	3866	14 %
Variable speed XC20[2]	2178	30 %	3706	20 %	884	32 %	2931	35 %

1 – XC21 operated as a single stage unit

2 – XC20 coil is slightly smaller than XC21 coil, so the savings are purely due to variable speed technology

[redacted]

LENNOX INTERNATIONAL

Energy Saving – Run Time Correlation

RESULTS – RUNTIMES

Simulated Cooling Runtimes: Constant cooling setpoint at 75 F

	Dallas		Phoenix		Chicago		Miami	
	Minutes	ON time	Minutes	ON time	Minutes	ON time	Minutes	ON time
Single stage XC21[1]	81493	16 %	115004	22 %	34291	7 %	123700	24 %
Two stage XC21	112604	21 %	160428	31 %	47052	9 %	170615	32 %
Variable speed XC20	198051	38 %	258466	49 %	89621	17 %	327143	62 %

1 – XC21 operated as a single stage unit

Similar runtimes

Field average cooling runtimes for systems

	S30 Data		
	Avg. Minutes	ON time	No. of units
Single stage XC17[2]	38852	8 %	107
Two stage XC21	52104	11 %	1105
Variable speed XC20	99858	21 %	1569

2 – XC17 is same as XC21 operated as a single stage unit

[redacted]

LENNOX INTERNATIONAL

Description of the Communicating System

The Lennox iComfort Communicating system recognizes and configures equipment, measures the room temperature and humidity and communicates with the indoor equipment (i.e.: furnace) and outdoor equipment (air conditioner) and other system components.

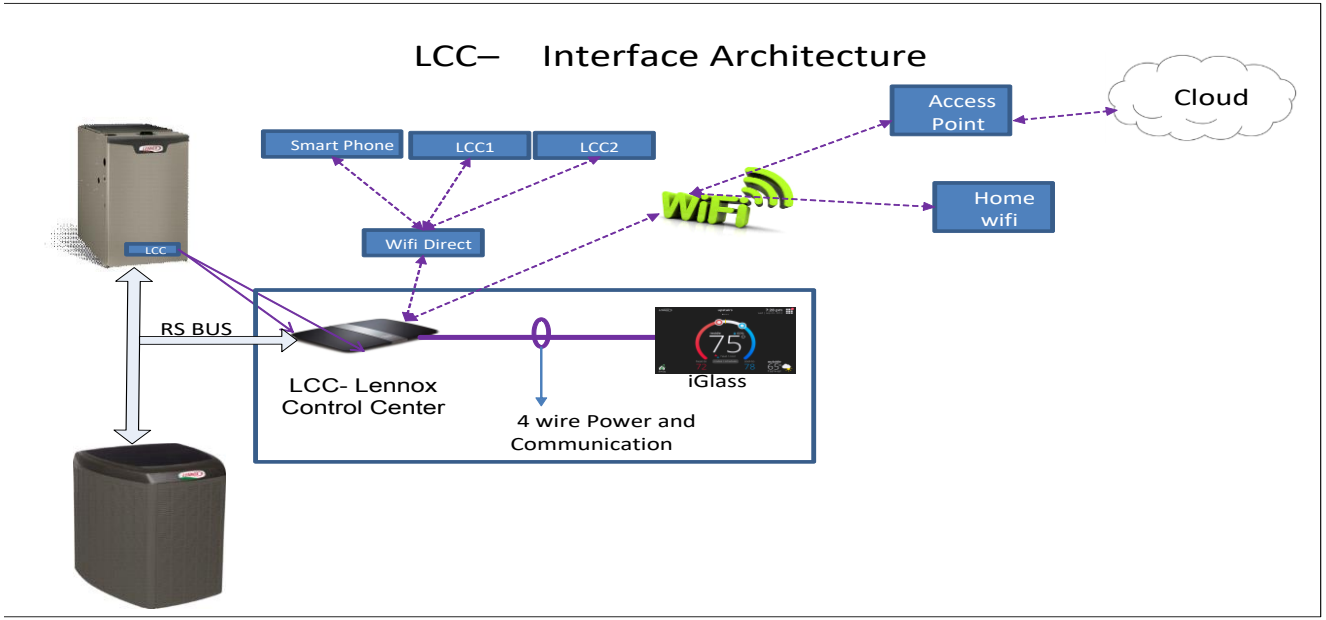

[redacted]

Lennox Communicating Controls

- **Designed as an integral component of Lennox communicating equipment**
- **Dealer Commissioning app for installation**
- **Installation reports**
- **Performance reports and emails**
- **Humidity control for enhanced comfort**
- **Zoning compatible**
- **“Feels Like” temperature adjusts temperature and humidity levels**
- **“Allergen Defender” filters the air depending upon air area quality levels**
- **Smart alerts to dealer when system is in need of maintenance**
- **Dealer Dashbaord with remote monitoring, debug and diagnostics**
- Ultra Smart thermostat with Schedule IQ that does the programming for you
- Wireless Access for complete control anywhere you go
- Wi-Fi remote monitoring and control via any smart device
- One-Touch Away Mode
- “Smart Away” geo-fencing technology setback while you are away
- 7-day weather and allergen forecast display to always keep you informed
- Voice control and Home Automation compatible

The Ultimate Controller for precise comfort.

WORKS WITH amazon alexa

Lennox Communicating Controls

- Communicating Products that are designed as part of a system provide many future opportunities to improve:
  - Installation
  - Efficiency Analysis
  - Performance Optimization
  - Comfort
  - Demand Response
  - Diagnostics
  - Prognostics

The Ultimate Controller for precise comfort.

WORKS WITH amazon alexa

[redacted]

Scope of this discussion

- Communicating controls, assumed but not required to be proprietary, with 2-way digital communication between the control and the controlled equipment. Does not assume that the "control" is all in one piece of equipment.
- POSSIBLY system of controls and HVAC
- Equipment subcategories may need to be treated differently:
  - Modulating fossil fuel fired heating equipment (warm air furnaces, possibly boilers if we can ignore zoning)
  - Variable capacity centrally ducted compressor-based heating and cooling (CAC, air source heat pumps, GHP) and 1:1 mini-splits with separate controllers
  - 1:1 mini-splits with controls inherent to device (out of scope?)
  - 1:many multi-splits (how to deal with zoning?)
  - Did I miss anything?

Discussion 1: Context-setting questions

- What proportion of communicating controllers are installed with single capacity systems? Dual capacity? Variable capacity?

- What data do systems generally have available? (set aside for the moment whether they are collected in the vendor's cloud, as we're likely to be able to work around that)
- Of the data available, are the meaning/methods/accuracy similar between vendors?

Discussion 2: Savings Mechanisms

- From many previous discussions, strong interest in a program that recognizes controls and HVAC together, rather than trying to separate out controls
- In fact, significant pushback that its even possible to consider savings attributable to the controls rather than the HVAC
- EPA is definitely open to this, but having a hard time imagining how to set up and administer such a program.
  - Quick checking for consensus: This is the better way to do it if we can
- Plan to discuss this more on Monday
- However, whether the program refers to the control plus HVAC or just the control, we still need to ID the savings mechanisms we want to target
- Field data and lab testing in various places has shown that even for equipment which is capable of savings, much of it isn't achieved in the field – focus on savings mechanisms affected by controls

Savings Mechanisms

- Set back and set up when possible
  - This is very simple to track, but very hard to know if its really saving energy
  - Could also just check if the unit knows about occupancy and sleep/wake
  - Could also check for intelligent recovery from setback
- Keep controlled AC and HP in lower capacity states when possible
  - "when possible" can be tricky
  - In some cases, may not save energy, but usually will
  - Related: temperature at which starts running uninterrupted for long periods of time (not including defrost)
- Avoid short cycling
  - Related: when cycling to maintain temp, come back on at lower capacity
  - Related, evaluating design for multi-splits: Can compressor deliver low enough capacity for single indoor head? Do indoor heads coordinate?
- Fan control [needs clarification – what makes for "good" fan control?]
- Lockout temperatures [there are several to consider]

Evaluating which savings mechanisms to focus on

- In a minute, everyone is going to have a chance to give feedback about what savings mechanisms make the most sense to focus on
- When thinking about this, here are some ideas about what make a particular mechanism a good choice:
  - Affected by control strategies and algorithms
  - Able to be examined with either prescriptive requirements (better to avoid) or with data as we've talked about it
  - Can identify a reasonable baseline to compare data to
  - Some products on the market are significantly better at it than others
  - Actual savings are significant in each home and/or apply to every home so that the total savings are significant
- Do we need to consider different mechanisms for different equipment types?