| Portion of Paragraph | | Point for consideration | Recommendation |
|---|---|---|---|
| Line: 198<br>Table 1: Sleep Mode Power Allowances | In-use Networking / Control Protocol with Wake Capability: | The pass through function of HDMI during active state of the circuit is ON mode function.<br>The HDMI circuit works as a primary function, which delivers video content | The pass through function of HDMI should be excluded from Sleep Mode. |
| Line: 201<br>3.5 On Mode Requirements | 222 PADD_i is the On Mode Power Function Adder for each applicable product function listed in Table 3, rounded to the nearest 0.1 watts, for a total of n such allowances. | The power consumption is different in a simple optical disc player and a HTiB. (Fig-1) | Idle power consumption of amplifier should be added to the "Table 3. On Mode Power function Addders"。 |
| Line: 285<br>Table 5: Amplifier Efficiency Requirements | Optical Disc Player: Playback Test | The calculation of efficiency on the amplifier is including big error at the complex audio products. (Fig-2)<br><br>Further discussion on Power consumption of DSPs is still necessary. | Amplifier Efficiency Requirements should be deleted.<br>Proposal of total power consumption limitation<br>Ptotal=P(Output Reference Level)+P(DSP)+P(NET)+P(DRIVE)<br><br>Where:<br>P(Output Reference Level): Refer to the output reference level of CEA 490A<br>P(DSP): The power consumption in the internal DSP circuit.<br>P(NET): The power consumption in the internal network circuit. (e.g. HDMI, USB, WiFi)<br>P(DRIVE): The power consumption in the internal optical disc player circuit |
| 3.8.1 | Audio/Video products shall not contain・・・ | ・The standard is not written in the body.<br><br>・Hazardous substances containment analyzation methods differ depending on the substance and portion of where it was taken from, making the analysis work very complex and difficult. Therefore, non-containment of hazardous substances are based on the manufacturer's inherent management, basically issuing | ・Include writing in compliance with RoHS(2002/95/EC).<br><br>・In this provision, include only the requirement for the "Manufacturer's Declaration of Conformity," and omit the necessity for the presentation of samples and data for authentication procedure. |
| Note: | The proposed toxicity requirement and compliance approach are consistent with the European Union RoHS Directive, ・・・, products that currently meet the EU RoHS Directive would satisfy this toxicity requirement. | | |
| 3.8 | ・・・ and Recyclability/Recycled Content | In regard to E-waste, restrictions on containment of hazardous substances, fee settings, etc., are regulated under each state law. Therefore, regulating recyclability is very complex and difficult. | Until an effective overall recycle scheme is established, it shouldn't be included as an "Energy Star Requirement." In addition, as we can not say that only the 6 substances non-contained are recyclable, it would be best to delete paragraph 3.8 entirely for the time being. |
| Note: | ・・・ seeks additional feedback from stakeholders on whether any existing standards that address recycled content in and/or design for recyclability of products could apply to Audio/Video products | | |

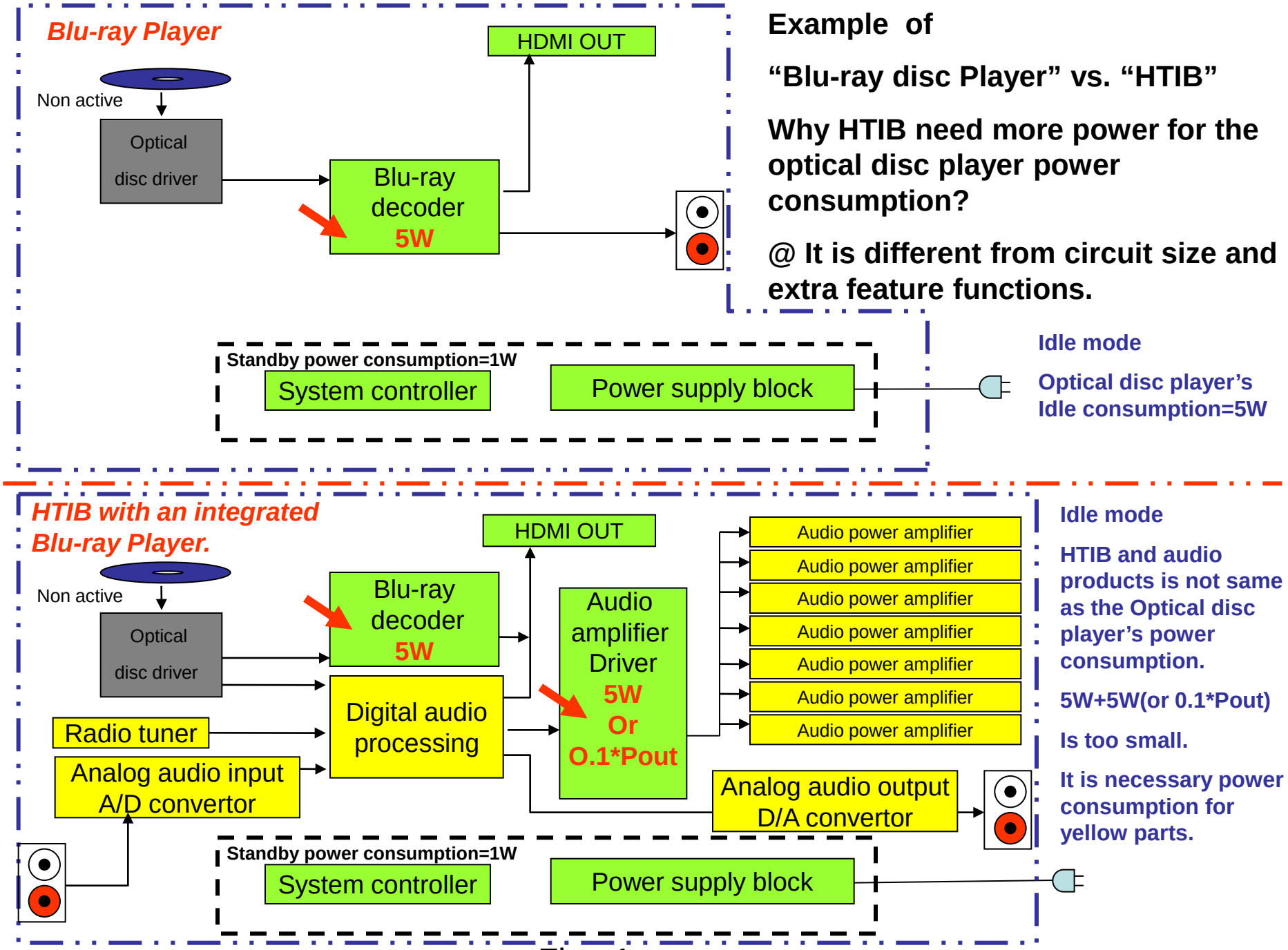


**Example of**

**"Blu-ray disc Player" vs. "HTIB"**

**Why HTIB need more power for the optical disc player power consumption?**

**@ It is different from circuit size and extra feature functions.**

Fig. -1

**Compact audio system with AV input.**

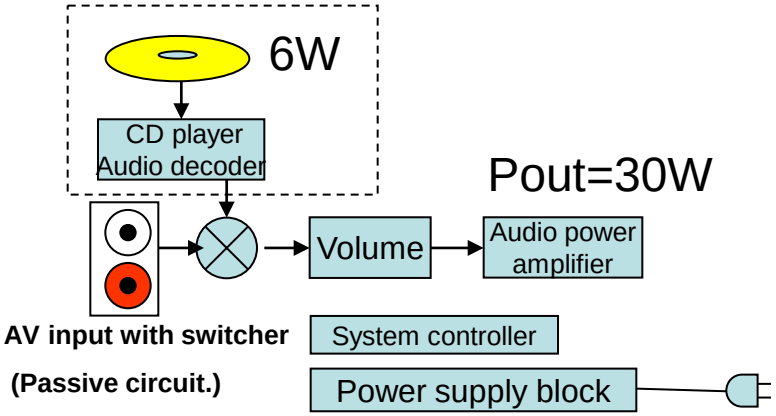


Pin=70W

Pout=30W

Efficiency=30/70*0.8=54%=**NG**

**Compact audio system without AV input.**

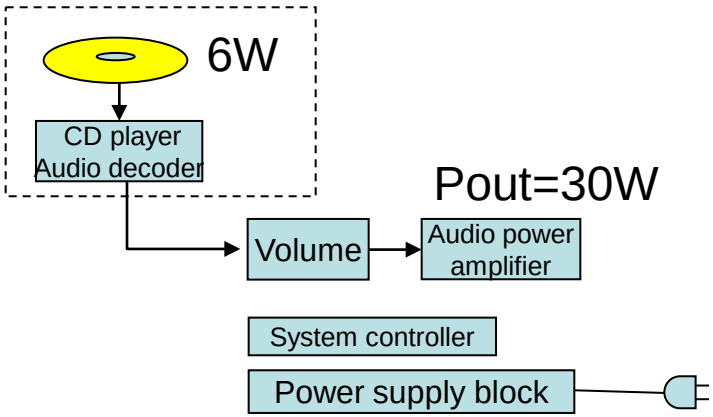


Pin=70W

Pout=30W

Efficiency=30/(70*0.8-6W)=60%=**OK**

These examples are same power consumption, but the result is different.

**Calculation**

Efficiency = Pout / Pin

| Product | Pin (Amplifier) | Pin (idle of player) | Total Pin | Pout | Efficiency |
|---|---|---|---|---|---|
| 1:Amplifier | 80W | - | 80W | 44W | 68.75% |
| 2;Amplifier+Blu-ray | 80W | 15W | 95W | 44W | 57.9% |
| 3;1/2Amplifier | 40W | - | 40W | 22W | 68.75% |
| 4;1/2Amplifier+Blu-ray | 40W | 15W | 55W | 22W | 50% |

Smaller output power is a worse efficiency.

The efficiency value of this calculating formula is not actually suitable.

Fig.- 2